Clinispin® CT25 Centrifuge
User Manual



WOODLEY
EQUIPMENT COMPANY LTD.

Table of Contents

1. Introduction **4**
2. Intended Use **4**
3. Features **4**
4. Technical Specifications **5**
5. Standard Accessories **5**
6. Installation **6**
6.1 Connecting Power Adaptor 6
7. Standard Parts Listing **7**
8. Tube Holders and Adaptors **7**
9. Rotor Installation **10**
9.1 Removing the Rotor 10
9.2 Installing the Rotor 10
10. Balancing the Rotor **10**
11. User Interface & Display **11**
11.1 Setting the Speed and Time 12
11.2 Switching to RCF Display 12
11.3 Start/Stop Operation 13
11.4 Opening the Centrifuge Lid in Case of Power Failure 13
11.5 Imbalance Detection 13
12. Safety Precautions **14**
13. Troubleshooting **14**
14. Warranty Statement **15**
15. Product Disposal **16**

1. Introduction

This manual provides important safety information for this centrifuge. It should be kept near the centrifuge for quick and easy reference. This centrifuge is equipped with a maintenance free brushless DC motor drive and a safety feature of imbalance detection. The centrifuge can be used for multiple application diagnostics and will work with a variety of blood collection tubes.

2. Intended Use

This is a benchtop centrifuge which is designed to separate, sediment, spin down aqueous solutions and solvent suspensions of differing densities in compatible sample containers.

NOTE:

Before using the centrifuge, please read this user manual carefully. This user manual is intended to assist with the operation and care of the unit. It is not a document which aids in repair. If repairs are needed, please contact Woodley Equipment Company.

3. Features

- Maximum volume of 6/8 x 15ml
- Imbalance detection safety with auto cutoff for safe operation
- Brushless DC motor for maintenance free performance
- Lid lock safety feature – the lid opens automatically on run completion
- Digital display with speed and time indicator
- RPM setting from 500-6500 RPM with a count of 100
- One press changeover from RPM to RCF functionality
- Digital countdown timer
- Reduction adaptors for tubes with volume less than 10ml
- Emergency lid release during power failure
- Automatic internal diagnosis and error display
- Silent operation

4. Technical Specifications

Option to choose 6 or 8 tube rotor that comes with autoclavable and tube holders.

Autoclavable and Non-Autoclavable	6 Tube Rotor	8 Tube Rotor
Motor Type	Brushless DC Motor	
Maximum Speed	6500 RPM	
Run Time	1 min to 30 mins & infinite mode	
Speed Setting	500-6500 RPM	
Speed Accuracy	±100 RPM	
Maximum Volume	6 x 15ml	8 x 15ml
Maximum RCF	3684 xg	3873xg
Fixed Angle	25°	
Acceleration Time	43 ± 2 seconds	
Deceleration Time	40 ± 2 seconds	
Dimensions (L x W x H)	260 x 244 x 203 mm	
Weight	4kg (with rotor)	
Power Adaptor	Input: 100-240 VAC, 50/60 Hz Output: 24V DC 4A	
Power Consumption	100 W	

5. Standard Accessories

- 6/8 Slot Rotor (pre-installed)
- T-Allen Key
- Reduction Adaptors (set of 6/8)
- Tube Holder and Rubber Cap (6/8)
- User Manual
- Warranty Card

6. Installation

Upon receiving the centrifuge, gently remove the packaging and take out the centrifuge by holding it from the bottom. Ensure that all the packaging accessories are removed from the rotor chamber. The rotor is pre-installed. Please make sure that the rotor is firmly tightened. Accessories and user manual are kept inside the box with the centrifuge. Please keep all the packaging safely for at least two years for warranty purposes.

The following points are important for proper installation.



Must be used on a flat, non-slippery surface

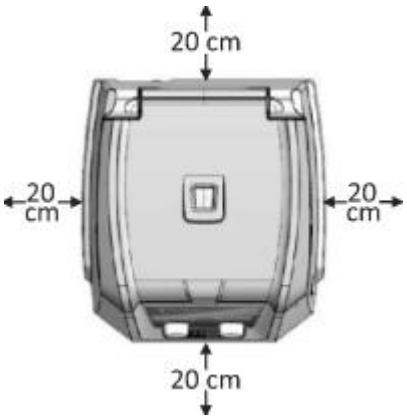

Must have clearance of 20cm from all 4 sides

6.1 Connecting Power Adaptor

1. Connect one end of the power adaptor to the rear side of the centrifuge and the other end to the power supply, as shown in the figure below.
2. Rotate clockwise with the adaptor nut to tighten the adaptor with the centrifuge. Ensure the power switch is OFF while connecting the power adaptor.
3. The sticker on the body and jack indicate the position of the rib on the jack. While fitting the adaptor to the unit, please match the sticker position, as shown in the figure below, and gently push it in.

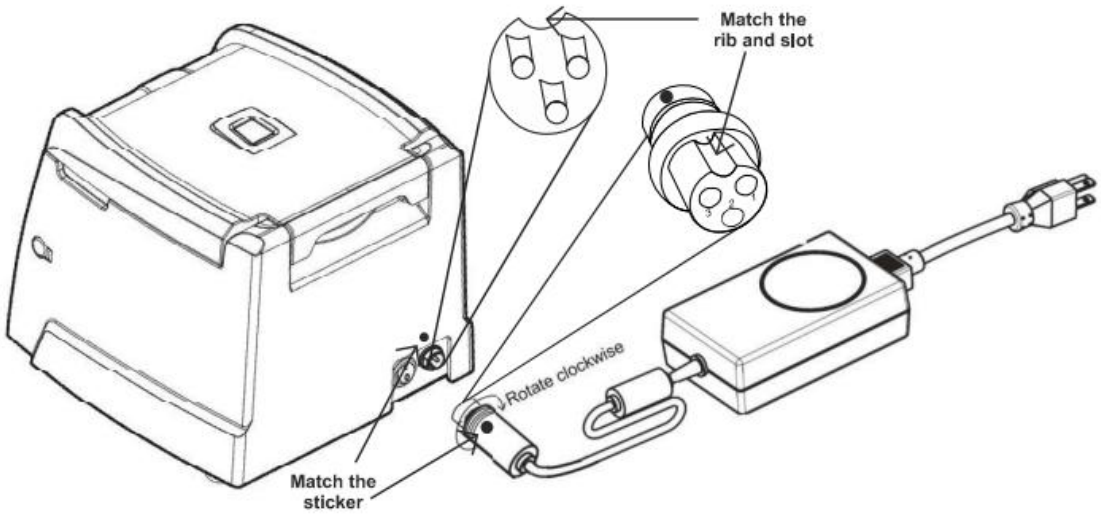

4. If matched correctly, the plug will go in easily without much force (do not try to force the plug in if it is not matched properly). Once the plug is inserted into position, turn the loose upper ring clockwise to tighten and to secure the fitment.

7. Standard Parts Listing

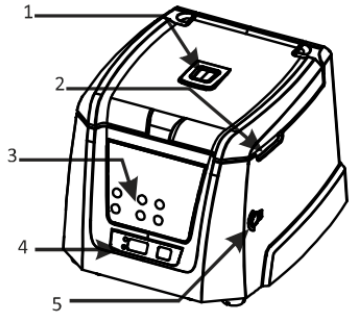

Front View

1. View window
2. Groove to open lid
3. Operation and setting buttons
4. Display
5. Emergency lid release

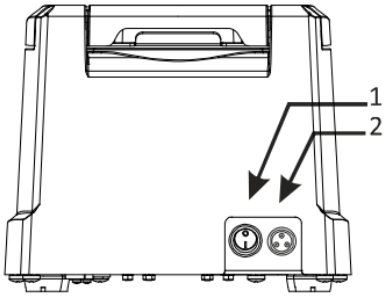

Rear View

1. Power switch
2. Adaptor port

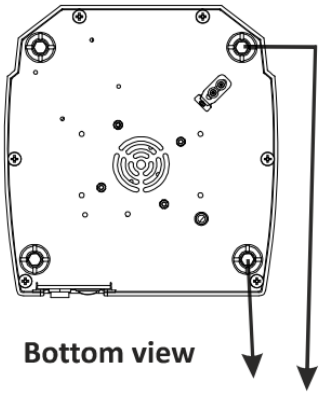

Bottom view

Rubber mount/base mount

8. Tube Holders and Adaptors

This centrifuge features centrifugation for a wide range of volumes from 1ml to 15ml with the combination of its adaptors. The accessories included are:

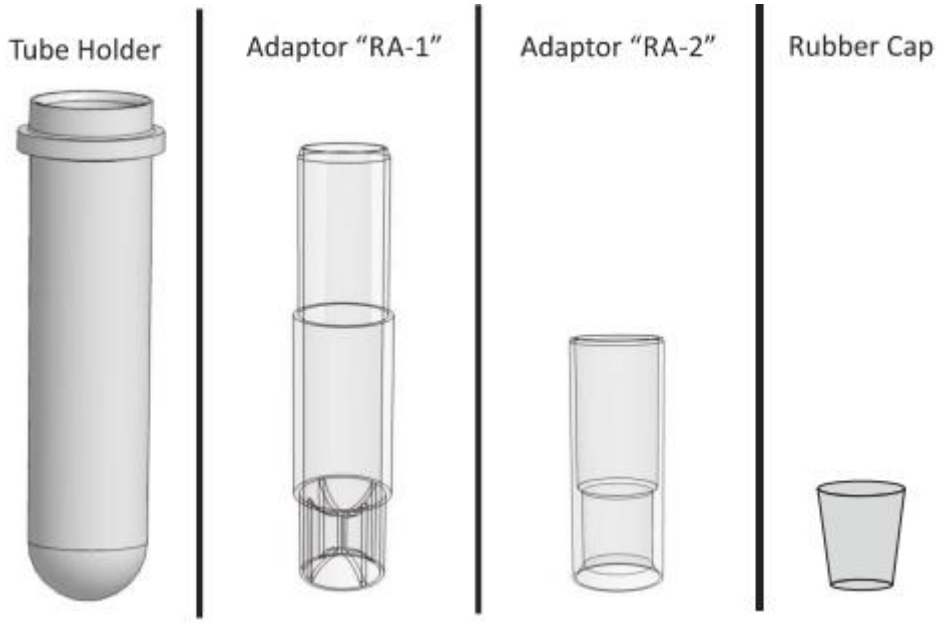

Tube holders are always to be used with the rotor. All of the 6/8 tube holders are mandatory to be placed in the rotor whether 2, 3, 4, or 6 or 8 tubes are used in balanced condition. By combining the above two adaptors and rubber caps, three different reduced adaptors can be designed to hold different types of blood collection tubes.

The different adaptor combinations along with the tube holder for different blood collection tubes are illustrated below.

NOTE:

- Maximum RCF value changes for different lengths of tubes.
- Tube holders are part of the rotor. Tube holders are mandatory to place whether 2, 3, 4 or 6 or 8 tubes are used in balanced condition.

Combination A

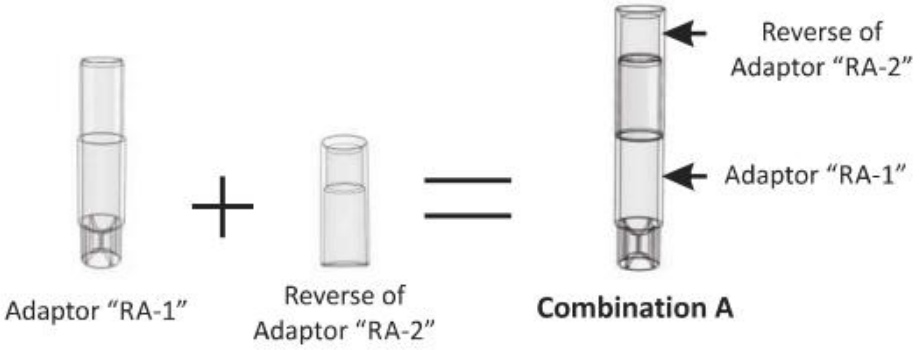

Combination B

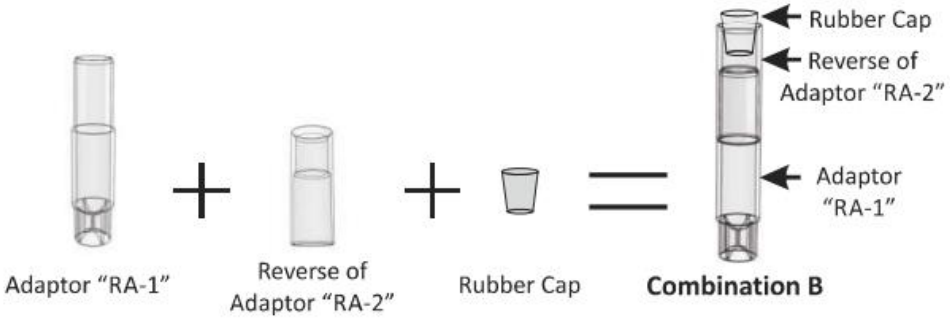

Combination C

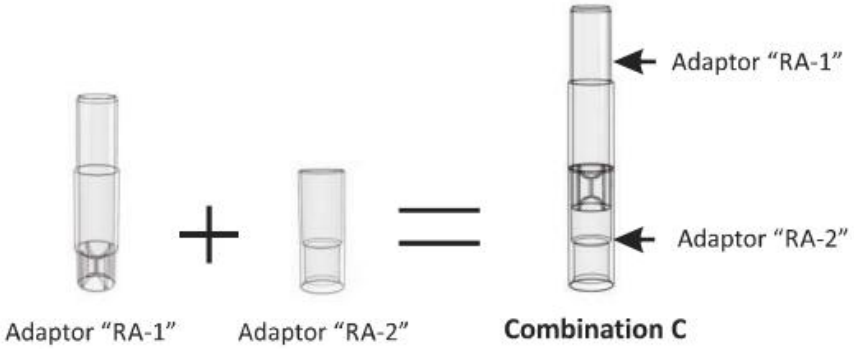

Adaptor Combination and Tube Sizes:

No Adaptor Combination
The maximum diameter and proposed length for this combination is:

Maximum Tube Diameter: 18 mm
Proposed Tube Length: 90 to 120 mm



TUBE HOLDER

Combination A
The maximum diameter and proposed length for this combination is:

Maximum Tube Diameter: 13 mm
Proposed Tube Length: 75 to 100 mm



A

Combination B or C
The maximum diameter and proposed length for this combination is:

Maximum Tube Diameter: 13 mm
Proposed Tube Length: 55 to 75 mm

Check both criteria (max. tube diameter and proposed tube length) of the blood collection tubes and use the appropriate adaptor/tube holder combination or only the tube holder to accommodate the tubes.



B C

9. Rotor Installation

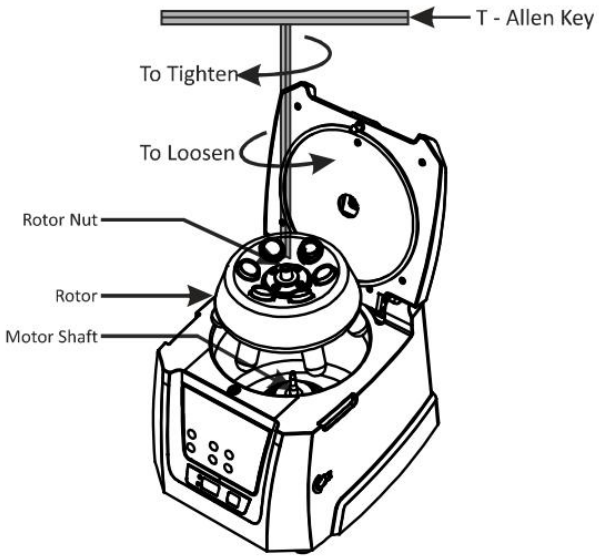

The rotor of the centrifuge is pre-installed. In case of any spillage, remove the rotor as shown in the above figure to clean the rotor and its chamber thoroughly.

9.1 Removing the Rotor

1. To remove the rotor, first remove the tube holders.
2. Using the T-Allen Key, loosen the rotor nut by rotating the rotor nut counterclockwise and take out the rotor vertically.

9.2 Installing the Rotor

1. Make sure the rotor shaft and the rotor mounting hole are clean. Load the rotor vertically into the motor shaft.
2. Put the T-Allen Key in the rotor nut and turn clockwise to tighten the rotor.
3. After properly fastening the rotor, place the tube holders into the rotor.

10. Balancing the Rotor

Always balance the rotor before centrifugation. Symmetrical loading of tubes in the rotor is necessary. Otherwise, vibration or imbalance can occur which can cause serious damage to the centrifuge. The following images show examples of symmetrical loading of tubes inside the rotor.



The samples in the tubes should be of equal volume. To achieve a balanced condition, tube holders are mandatory to place inside the rotor whether 2, 3, 4 or 6 or 8 tubes are being used.

If the tubes are not loaded symmetrically, the imbalance detector will cut off the running centrifuge for safety reasons. This will stop the centrifuge and Err 55 will display indicating the tubes are not loaded symmetrically. To resume operation, load the tubes symmetrically and restart the centrifuge.

Below are examples of incorrect methods of loading tubes into the rotor.



11. User Interface & Display

After properly installing the centrifuge, switch the centrifuge ON from the rear side by pressing the power switch. The lid status will be seen on the display. If the lid is open, the display will show “Lid”. If the lid is closed, the set RPM will be displayed. Please ensure that the tube holders are inside the rotor.

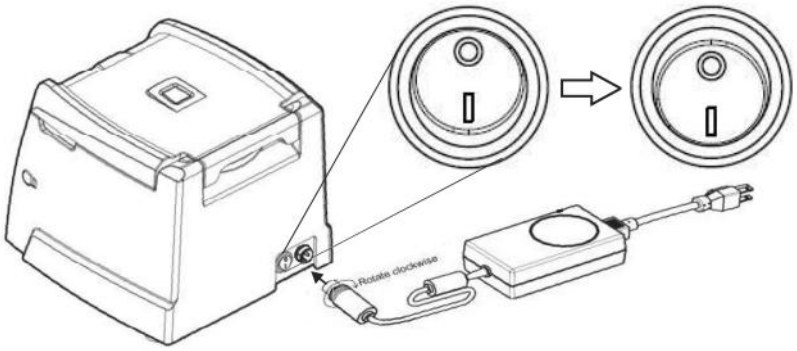

11.1 Setting the Speed and Time

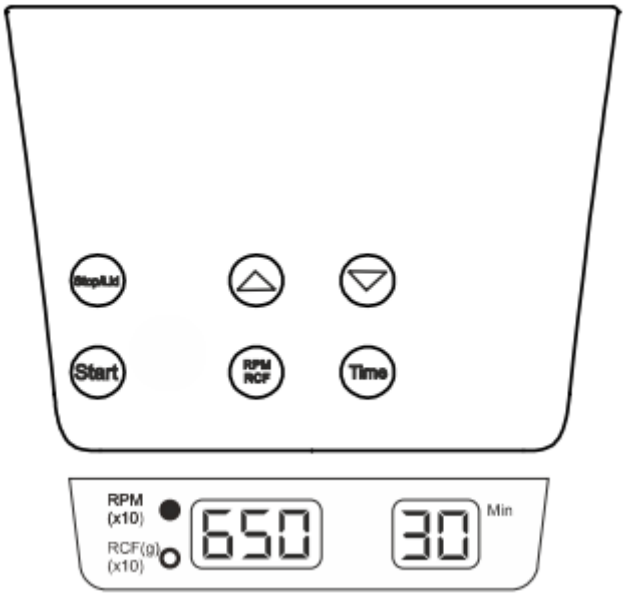

1. To set the speed, press the RPM/RCF button. Then, with the use of the increment and decrement buttons, set the desired speed.
2. The increase and decrease of speed will take place in increments of 10 RPM. The display window at the bottom will show the values.
3. The minimum and maximum speed of the centrifuge is 500 RPM and 6500 RPM respectively. Speed is to be read as ten times the value in the display window (e.g. 650 in the display window equals 6500 RPM).
4. The speed can be changed during the operation of the centrifuge. Upon changing the speed, the centrifuge will start running on the updated speed for the remaining time left on the centrifuge cycle.
5. To set the time, press the TIME button. Then, with the use of the increment and decrement buttons, set the desired time. The set time can be displayed in the display window at the bottom.
6. The time range allows the user to choose between 1 minute to 30 minutes & infinite mode. Infinite mode is displayed as][.
7. The centrifuge incorporates a countdown timer. After each minute of operation, the value of the timer is reduced by 1 minute.

NOTE:
The centrifuge will not run with the lid open.

11.2 Switching to RCF Display

Press the RPM/RCF button to change the mode from RPM to RCF. While in RCF mode, the speed value is to be read as ten times the value in the display window. The maximum RCF of the centrifuge is 3684/3873 xg. Press the RPM/RCF button to see the corresponding RPM value.

11.3 Start/Stop Operation
Once all the parameters are set, press the START button to start the operation.

1. Make sure the lid is closed before starting the centrifuge.
2. The display will keep flashing until the set parameters (RPM/RCF and Time) are reached. Once the set parameters are reached, the display will flash multiple times until the set value is reached.
3. When centrifugation is complete, the lid of the centrifuge will open automatically and the timer value will start flashing again.

Press the STOP/LID button any time the centrifuge needs to be stopped.

After every run, the lid opens by itself. In any other case, when the lid needs to be opened, push the STOP/LID button to open the lid.

11.4 Opening the Centrifuge Lid in Case of Power Failure
Disconnect the centrifuge from the main supply. Wait until the rotor comes to a standstill (this may take some time).

Once the rotor has stopped, pull out the emergency lid release as shown in the figure. This will open the centrifuge lid. After the centrifuge lid opens, push the thread back in the hole with your hand and fit the emergency release cap back in the hole.



11.5 Imbalance Detection
This centrifuge is equipped with an imbalance detection safety feature. When the rotor is not loaded symmetrically, the imbalance detector is activated. This will cut off the centrifugation and Err 55 will display. To correct the imbalance, open the centrifuge lid and correct the imbalance using the methods described in Section 10. After correctly loading the tubes into the rotor, turn the centrifuge off and turn it back on.

12. Safety Precautions

- Never use the centrifuge in any manner not specified in this manual.
- Never move the centrifuge while it's operating.
- The rotor must always be securely fastened. If the centrifuge makes an unusual noise during the operation, the rotor fit needs to be checked.
- The rotor must be loaded symmetrically.
- Do not use the centrifuge of rotor if it is not installed correctly or if it is damaged.
- Do not use the centrifuge or rotor if it shows any sign of external mechanical or electrical damage.
- The centrifuge must be used only for the specified applications. It must not be operated in a hazardous or flammable environment and no hazardous or flammable content should be centrifuged.
- Do not fill tubes while they are in the rotor. Liquid spillage may harm the centrifuge.
- If liquid is spilled on the rotor or rotor chamber, the centrifuge must be cleaned immediately.
- Tube holders are a part of the rotor. They should be placed in the rotor whether 2, 3, 4, 6 or 8 tubes are being used.

13. Troubleshooting

The centrifuge has a self-diagnostic function. If a problem occurs, an error/warning code will be displayed on the display screen and the operator can determine the error using the following table.

Error	Problem	Solution
No display	No main power connection	Check the power and properly plug in the mains cable at both ends.
	Power failure	Check the mains fuse of the lab.
	Improper connection	Connect the adaptor properly.
Err 55	Rotor not loaded symmetrically	Load rotor symmetrically and restart the centrifuge.
Centrifuge lid cannot be opened	Rotor is still spinning	Wait for the rotor to come to a complete stop.
	Power failure	Use the emergency lid release after the rotor has come to a complete stop.
Centrifuge shakes during acceleration and unusual running noise	Rotor not loaded symmetrically	Stop the centrifuge, load the rotor symmetrically and restart operation.
	Either a broken tube, damage to the rotor or motor is the cause of the unusual run noise	Replace the broken tube. For damaged rotor/motor, contact Woodley Equipment Company.
	Rotor damaged	Remove and change the rotor.
Err 52	Rotor is stuck	Turn the centrifuge OFF. Check and fit the rotor properly and turn the centrifuge ON.

IMPORTANT NOTE:

- If the centrifuge is working slow or overheats due to overdraw current, restart the centrifuge and check it again.
- Do not use liquid with density higher then 1.2 g/ml for full load operation.

14. Warranty Statement

This product is warranted to be free from defects in material and workmanship for a period of one (1) year from the date of purchase. Your product will be duly repaired upon prompt notification in compliance with the following conditions:

This warranty is valid only if the product is used for its intended purpose and within the guidelines specified in this manual. This warranty does not cover damage caused by accidents, neglect, misuse, improper service, natural forces or other causes not arising from defects in original material or workmanship. This warranty does not cover any incidental or consequential damages, commercial loss or any other damages from the use of this product.

The warranty is invalidated by any non-factory modification, which will immediately terminate all liabilities on Woodley Equipment Company for the products or damages caused by its use. The buyer and its customer shall be responsible for the product or use of products as well as any supervision required for safety. If requested, the products must be returned well packed and all shipping charges must be paid.

Some states do not allow limitation on the length of implied warranties or the exclusion or limitation of incidental or consequential damages. This warranty gives you specific legal rights. This warranty is given expressly in lieu of all other warranties, expressed or implied.

The purchaser agrees that there is no warranty of merchantability or of fitness for any intended purpose and that there are no other remedies or warranties, expressed or implied, which extend beyond the description on the face of the agreement. This warranty is only applicable to the original purchaser.

Products received without proper authorisation will not be entertained. All items returned for service should be returned in the original packaging or other suitable carton, padded to avoid damage. Woodley Equipment Company is not responsible for damage incurred by improper packaging.

For your reference, make a note of the serial number and date of purchase here.	
Serial No.:	Purchase Date:

15. Product Disposal

In case the product is to be disposed of, the relevant legal regulations are to be observed.

Information on the disposal of electrical and electronic devices in the European Community:

The disposal of electrical devices is regulated within the European Community by national regulations based on EU Directive 2012/19/EU on Waste Electrical and Electronic Equipment (WEEE). According to these regulations, any devices supplied after 13.06.05 in the business-to-business sphere, to which this product is assigned, may no longer be disposed of in municipal or domestic waste. They are marked with the following symbol to indicate this.



As disposal regulations within the EU may vary from country to country, please contact your supplier if necessary.

Woodley Equipment Company Ltd.

UK Office:
Old Station Park Buildings,
St. John Street,
Horwich,
Bolton,
BL6 7NY, UK
Tel: +44 (0) 1204 669033
Email: sales@woodleyequipment.com

Woodley Equipment Inc.

USA Office:
Brooklyn Navy Yard,
63 Flushing Avenue,
Building 212, Suite 209,
Brooklyn, NY 11205
Toll Free: 1-800-471-9200
Tel: 1-315-618-7600
Email: hello@woodleytrialsolutions.com

Web: www.woodleyequipment.com

Nov 2026